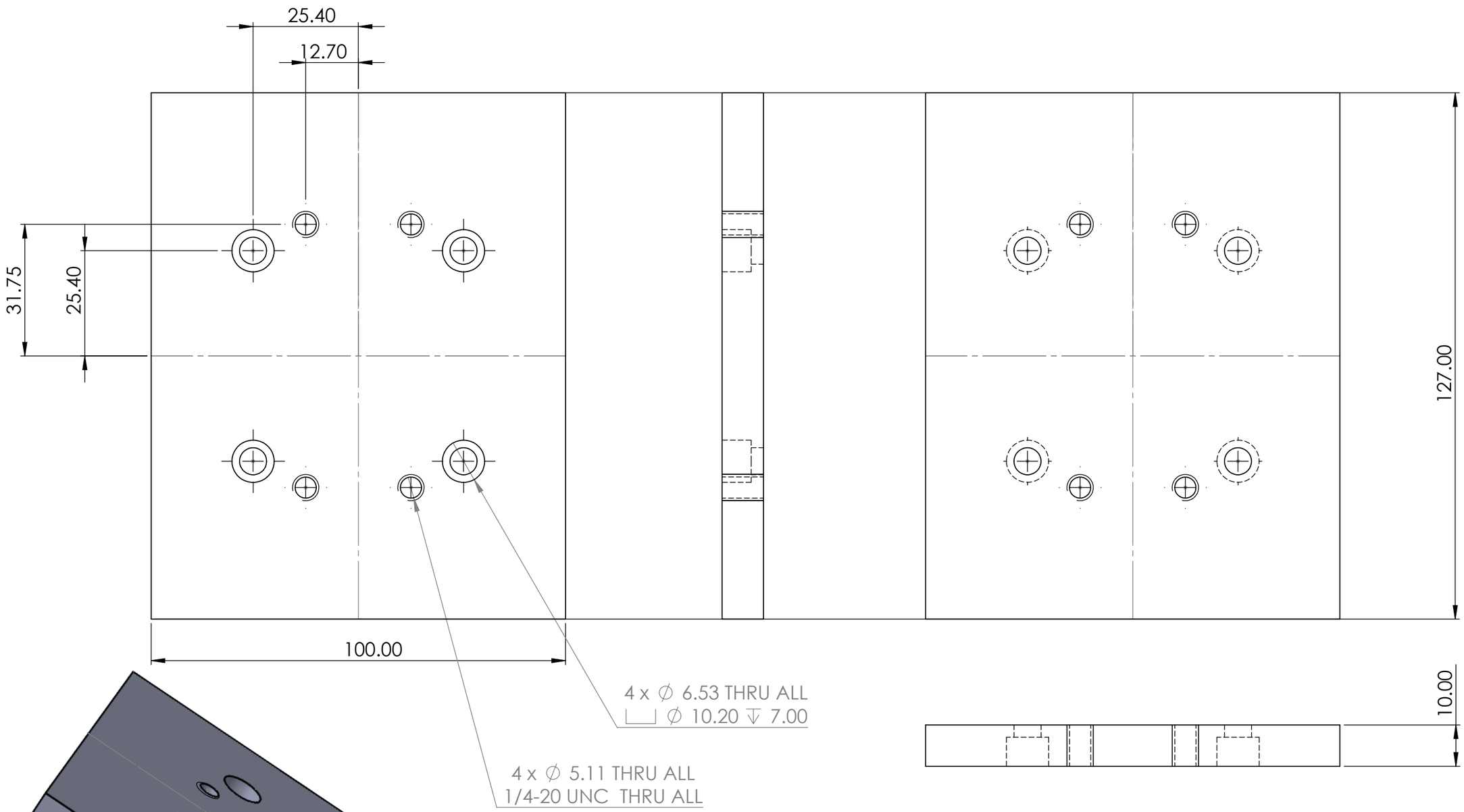

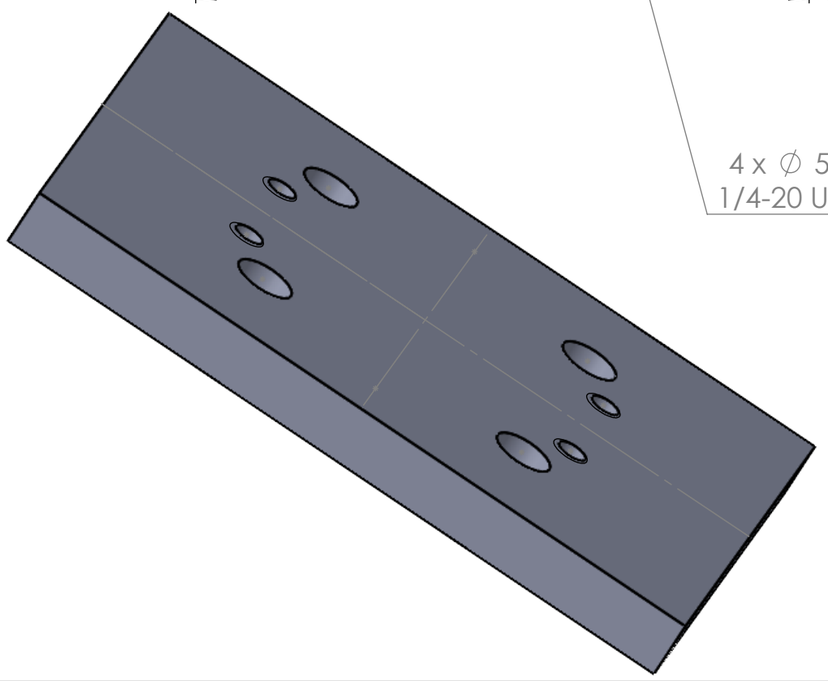

UNLESS OTHERWISE SPECIFIED: DIMENSIONS ARE IN MILLIMETERS SURFACE FINISH: TOLERANCES: LINEAR: ANGULAR:	FINISH:			DEBURR AND BREAK SHARP EDGES	DO NOT SCALE DRAWING	REVISION
					Quantity: 1	
	NAME	SIGNATURE	DATE		TITLE: Z-motor Adaptor	
DRAWN						
CHK'D						
APPV'D						
MFG						
Q.A				MATERIAL: Anodized Aluminum	DWG NO. Part Drawing 02	A3
				WEIGHT:	SCALE:1:1	SHEET 1 OF 1